www.polysmart.org

PolySMART

Combined Heating, Cooling and Power Generation in the Small Capacity Range

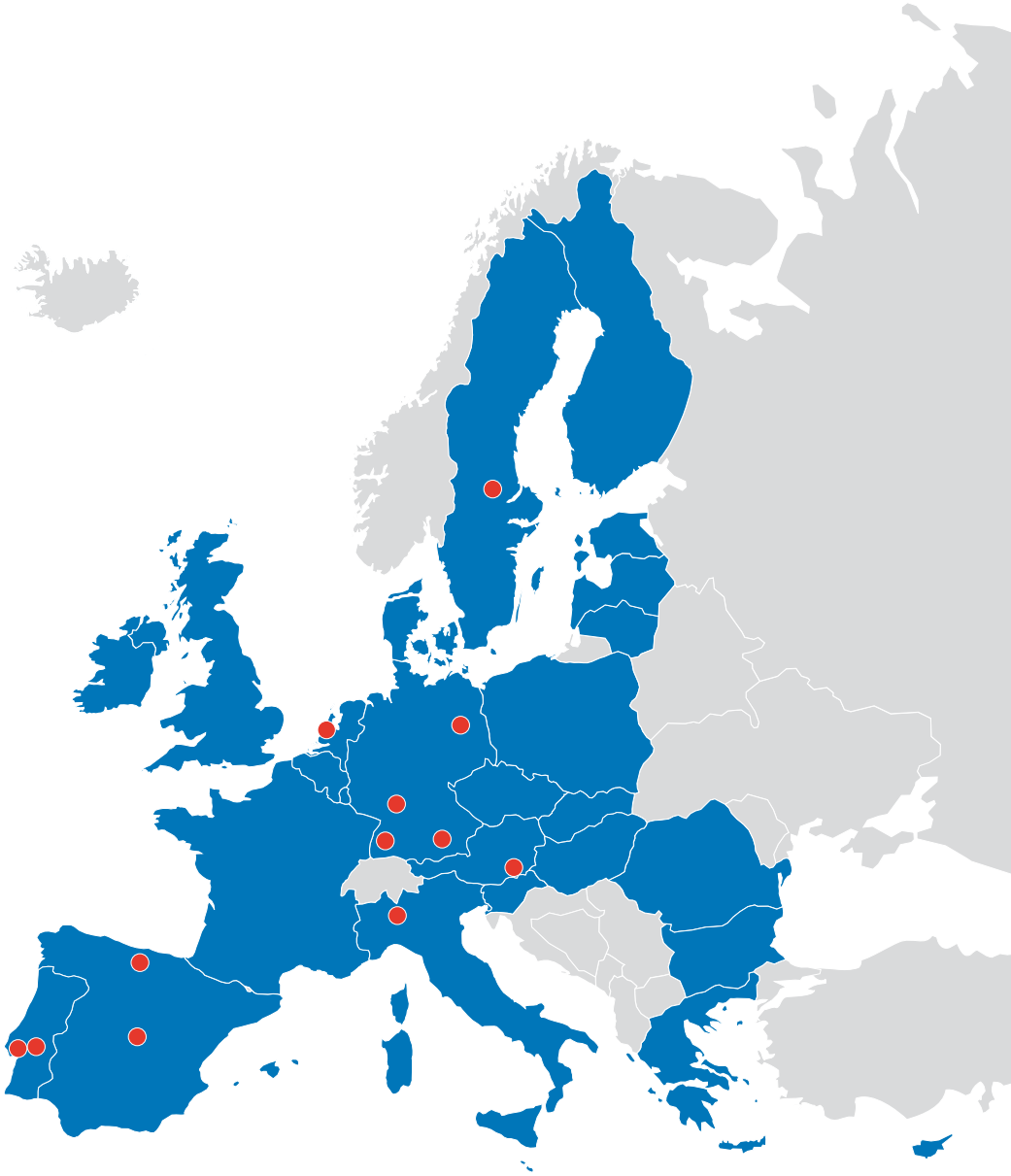

Information brochure produced as part of „PolySMART®– POLYgeneration with advanced Small and Medium scale thermally driven Air-conditioning and Refrigeration Technology", an Integrated Project partly funded by the European Commission under Framework Programme 6, DG "Energy and Transport"

Motivation and general system schemes

Combined heating, cooling and power generation in the small capacity range

Why use combined heating, cooling and power systems (CHCP systems)? The advantage of combined production of heating and power in a co-generation (or CHP) system is obvious: the waste heat which is always produced when electricity is generated using thermodynamic cycles is not rejected to the environment – like in large scale centralized power plants – but can be used. Typical use of this heat is to heat buildings or to produce domestic hot water. However, the times when use can be made of this heat are limited on certain seasons, at least if the main part of the waste heat is applied for heating buildings. Depending on the building site and building standard the heating season often lasts for only 6 months or less. But for the economic viability of CHP systems it is important that they are used as much as possible. Therefore, other uses of the waste heat are awakening more interest. One of the possible uses of waste heat during the non-heating season is cooling. The demand for summer air-conditioning of buildings in Europe is increasing due to enhanced comfort expectations, architectural trends using large glass façades and also due to climate change. Therefore, the combination of combined heat and power (CHP) and thermally driven chillers (TDC) operated with the CHP's waste heat seems to be a logical step.

CHP	=	combined heat and power
mCHP	=	micro-CHP
TDC	=	thermally driven chiller
CHCP	=	combined heat, cooling and power
mCHCP	=	micro-CHCP

In the **PolySMART** project we studied the potential of this promising combination according to different criteria. The main objectives of operation of this combined system called “Combined heating, cooling and power (CHCP)” are the following:

- To reduce the consumption of conventional energy for cooling by use of waste heat from a co-generation system in combination with a thermally driven cooling process.
- Thereby to improve the economic viability of the entire system by an increase of the annual operation time of the CHP unit.

CHCP technology already exists on a large scale, mainly for industrial applications and some district cooling applications. Our goal within PolySMART was to develop further application areas using small-scale CHCP systems in the commercial, tertiary and residential sectors.

The two main system categories studied within PolySMART are shown in the two figures right. They both contain small, decentralised, thermally driven cooling units. However, combined production of heat and power can be on a centralized level or also on a decentralized level.

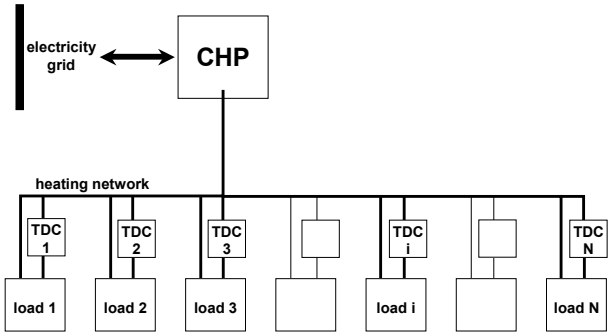

Centralized combined heat and power generation (district heating network) with decentralized cold production. The systems consist of a TDC connected to the heating network.

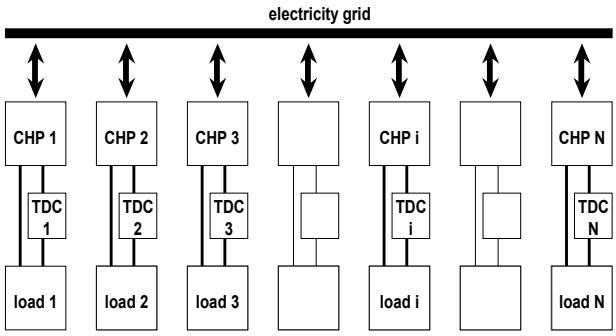

Decentralized generation of power and cooling. The systems consist of a micro CHP unit and a TDC and are only connected to the electricity grid.

Key components and their availability

The key components of a CHCP system are the prime mover, producing heat and power (CHP unit), and the thermally driven chiller (TDC). Both components are well established in the large power range but not in the small and micro-size range. Within the PolySMART project we considered micro-CHCP systems with a power range of up to 50 kW_e, a thermal power of 150 kW_t and a cooling power of up to 30 kW_c to focus our attention and research on this less developed power range.
A survey of the available technologies was carried out in order to find the state of the art of each technology, current research topics in the field, and available experience of combining these technologies into small and micro-scale CHCP systems.

COMBINED HEAT AND POWER SYSTEMS (CHP)

Today most small and micro-CHCP systems are set up with **internal combustion engines**. Heat is recovered from an oil cooler, an engine jacket and from exhaust gases. The systems are well developed, have high reliability and long maintenance intervals. **Microturbines** are available starting at about 30 kW_e, but are relatively expensive. Here, heat is recovered from the exhaust gases by a heat recovery system usually included in the package. Due to the external combustion of the fuel, **Stirling engines** are especially suitable for heat from biomass. Several prototypes have been developed but only a few gas-driven machines are on the market. **Steam engines**, a technology well established in the large power range, are still in development for the small capacity market. The same is the case for **organic rankine cycle** machines, where only a few small-scale prototypes have been studied. Regarding the relatively new and highly interesting fuel cell technology, considerable research is being registered in the field of **proton exchange membrane fuel cell (PEM-FC)** and **solid oxide fuel cell (SOFC)** technology. Both technologies are characterized by a high electric efficiency, a very important factor in micro-CHCP systems. Nevertheless, these technologies are not on the market yet, although progress has been announced with prototypes and field trials. The following table shows an overview of the state of the art of each technology, their pros and cons, and the number of systems included in our survey.

CHP technology	State of the art	Main advantages	Main drawbacks	Number of systems surveyed
Internal combustion engines	well established and many systems available	known technology reasonable electric efficiencies (around 30%) and costs	return temperatures normally limited to 90°C, maintenance and noise	more than 20
Microturbines	well developed and some small capacity systems available	high temperature exhaust gases	cost of the system	6 in the power range of up to 250 kW_e
Stirling engines	some systems are available on the market; biomass systems still under development	external combustion	low electric efficiencies	13 systems (most of them prototypes)
PEM-Fuel cells	some prototypes available, still under development - mainly for the automotive sector	potential high electric efficiencies, flexible technology for many applications and power ranges	needs pure hydrogen, sensible to fuel contamination, vulnerable membrane and frost sensitive, low operation temperature (<90°C)	2 prototypes
SO-Fuel cells	under development, only prototypes available	acceptance of different fuels with internal reforming, high electric efficiencies, higher extraction temperatures	very high internal temperatures, stability and material degradation still a problem	8 prototypes
Organic rankine cycles	no development of small systems, only large systems available	low driving temperatures possible	low electric efficiency	2 prototypes
Steam engines	little development for small systems	known technology for large systems	low efficiencies	4 prototypes

State of the art and main advantages and disadvantages of different CHP technologies

THERMALLY DRIVEN COOLING TECHNOLOGY (TDC)

Absorption LiBr – water: Lithium-bromide – water adsorption systems are a well-established cooling technology since many years. Many manufacturers are active in the market for large capacity systems, both for single-effect and double-effect machines. Recently, small-capacity single-effect systems with cooling powers around 5 to 30 kW_c have been developed and are now available on the market.

Absorption water – ammonia: As the case of lithium-bromide – water systems, the technology is well known and developed for large capacities. Direct gas-fired systems are also well established. Indirectly fired small capacity systems have only been developed recently. The main goal of these developments is to provide systems with driving temperatures below 100°C.

Absorption LiCl – water: This absorption pair is used only by the company Climatewell. The system developed by this company is commercially available and provides 8 kW cooling capacity, but is characterised also by its heat and cold storage abilities.

Adsorption: Adsorption technology is less developed than absorption. Two adsorption pairs have been used for adsorption chillers up to now: Silica gel – water and zeolite – water. The intrinsic periodic operation of adsorption chillers requires special attention to the hydraulic integration of these machines. Only few large machines are available on the market. In the last few years, new small-capacity machines (7 to 15 kW_c) have been developed and are available as small series products. Research is going on in order to improve materials and components.

Jet stream cycles: Large-capacity systems in industry is the present field of application. In the range of small capacity systems only prototypes are under development.

TDC technology	State of the art	Main advantages	Main drawbacks	Number of systems surveyed
Lithium-bromide – water absorption systems	on the market for many years for large systems (>100 kW), recently also small systems (5-30 kW)	well-developed systems and steady operation	risk of crystallization at high heat rejection temperatures	8 systems with capacity of up to 70 kW_c
Water – ammonia absorption system	on the market for many years; indirectly fired small capacity systems only in the last few years	no risk of crystallization	lower COP (around 0.6) than LiBr systems; high heat rejection temperatures require high driving temperatures	5 small capacity systems on the market, some prototypes
Adsorption systems	large systems are commercial but offered only by one company, recently small capacity as small series products available	no moving parts, no risk of crystallization	somewhat lower COP (around 0.6); periodic operation characteristics require careful hydraulic integration	5 commercial and pre-commercial systems, 1 prototype
Jet stream cycles	research and prototypes for small capacity systems, commercial for large capacities	only one working material	unstable behaviour at higher than nominal heat rejection temperatures	1 prototype

State of the art and main advantages and disadvantages of the surveyed TDC technologies

Market opportunities and potentials

What are the market opportunities for small-scale CHCP systems? Where is potential in terms of regions and applications? These are important questions for manufacturers in terms of product development as well as for planners in the selection of technical solutions for building projects. We tried to provide answers to these questions within the PolySMART project.

DESCRIPTION OF METHODOLOGY

The methodology used consists first of a general approach to the potential European market for CHCP, followed by detailed computer simulations of typical example cases in the climatic areas in question, and concludes with an analysis of market opportunities and challenges.

The applied top-down approach includes:

- The assessment of boundary conditions for all study cases, i.e. heating & cooling energy demand, energy prices, primary resource factors, incentives, fuel availability and rural and urban development.
- Detailed simulations that consider time varying loads, auxiliary element sizing, financial benefits calculation, incentive rules, energy price sensitivity, plant operation discontinuities and start-up transients and thermal losses.

ASSESSING BOUNDARY CONDITIONS

Key indicators for economical attractiveness are potential primary energy and gross financial savings.

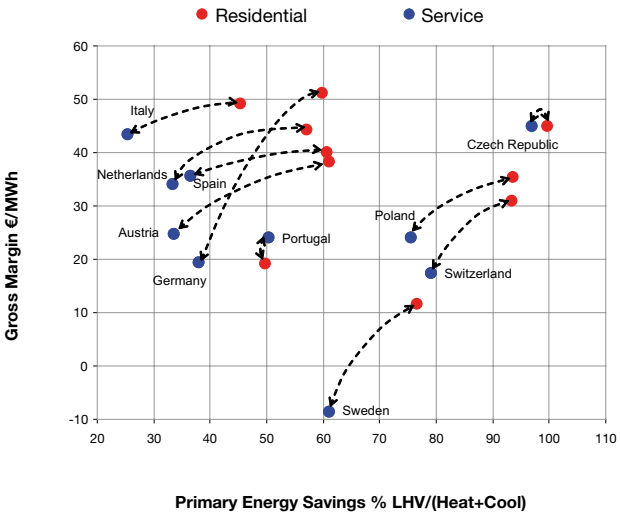

The plot above shows the gross margin vs. percentage of primary energy savings per unit of useful heat and cold for gas fired micro-CHCP. The calculation was done on the basis of country average specific heating and cooling demand per m^2 of floor area in the year 2007 and assuming 100% heating and cooling demand coverage. LHV = lower heating value.
Although the analysis is carried out at a general level, the resulting picture suggests that some countries are better positioned than others: Czech Republic and Poland are set for large primary energy savings, Italy is set for large gross margin.

The potential for fossil fuel primary energy savings and financial savings has been assessed by comparing the different energy carriers utilization occurring between micro-CHCP and the separate production of heating, cooling and electricity (conventional reference system), all things being the same on the user's side.

Gross financial savings are calculated estimating the differences between the CHCP system and the reference system in terms of both yearly net benefits over the system's useful life and initial costs. Thanks to inherent electricity savings, CHCP systems provide benefits that compensate for extra costs (fuel, maintenance and investment). Incentives play a key role in profitability scenarios.

KEY RESULTS

The present study assesses the market potential of grid-connected small scale or micro-CHCP systems - from 1 to 50 kW_e.

NICHES

With an average growth rate of 5% p.a. and a share of 75% for new installations, a substantial growth in the air conditioning market is foreseen. In the frame of such scenario, micro-CHCP is likely to be applied in:

- Medium size hotels (< 200 rooms)
- Small hospitals (< 200 beds)
- Office buildings (< 4000 m^2)
- Small industries
- Small supermarkets

Residential applications present a tight margin, due to the high investment cost in relation to the small dimensions in single-family houses.

ENERGY SAVINGS

Micro-CHCP can typically achieve primary energy savings of 15% to 35% relative to a conventional heating and cooling system, depending on the application.

Primary energy savings are easier to obtain in heating (CHP) than in cooling mode (CCP).
At the current level of grid efficiency, micro-CHCP can compete with cooling separate production only when the micro-CHP electrical efficiency is above 25% on a low heating value basis. Moreover, TDC electrical consumption and thermal COP must be within the best values achievable at the present state of development.

PERSPECTIVES

Micro-CHCP is more profitable when:

- the price of fuel is low in relation to that of electricity,
- the electricity demand is substantially high in relation to heating & cooling demand, and
- heating & cooling demand profiles are such that base load constitutes a large share (40% - 50%) of the total thermal demand.

District heat connected TDCs are environmentally and financially sound when free heat is available .
According to statistics, about 100,000 installations can be suitable for micro-CHCP in the service sector, mainly in hotels and hospitals.

SUMMARY FIGURES

The table below gives a summary of the economical potential of micro-CHCP in the analysed cases:

	Italy	Spain	Poland	Germany
Sector	hotels	residential	hospitals	offices
Evaluated applications	3 and 4 star 25, 50, 100 rooms 5 locations	1-family house high & low insulation, 4 locations	200, 500, 800 beds 1 locations	2000, 4000, 8000, 16000 m^2 1 location
Best application	North - business 50 rooms (3-4 star)	Madrid climate multi-family house, low insulation	50-200 beds all locations	8000 m^2 less insulated higher electrical loads
PES (%) - Max - Optimal	 25-35% 10-15%	 15-25% 10-15%	 20% 10%	 20% 10%
Demand coverage	50-75% heating 50-75% cooling	60-80% heating 20-30% cooling	40% heating 15-20% cooling	25% heating 30% cooling
Best CHCP size	20-50 kW_e 30-80 kW_t 15-35 kW_c	20-50 kW_e 30-80 kW_t 15-35 kW_c	20-50 kW_e 30-80 kW_t 15-35 kW_c	15 kW_e 30 kW_t 15 kW_c
Financials - BAU scenario - Political support	 reasonable good	 poor neutral	 neutral reasonable	 neutral reasonable

Economic potential of mCHCPs in selected cases.
PES = primary energy savings, BAU = business as usual

Systems

Although the key components for micro-CHCP systems exist, only very little experience of their combination in practical application is available. Therefore, the core of the PolySMART project is to study the real life performance of different technical solutions, to optimise the interaction between the different components and to develop robust and optimised operation and control strategies.

VARIETY OF SYSTEM SOLUTIONS

Eight demonstration sub-projects using different TDC technologies are currently being carried out on twelve sites in seven European countries, dealing with a wide spectrum of applications (see map and table). Different combinations of TDC and mCHP systems or heating networks from central CHP have been developed to a nearly pre-commercial stage. The operation of the demonstrations is being investigated under real operation conditions (varying loads) and assessed with regards to cost-savings and energy performance.

The installations are equipped with sensors in accordance with the project standards. Thus, major energy fluxes are constantly recorded for performance assessment and investigation of system behaviour. Special attention is paid to the collection of experience made and lessons learned during the system design, assembly and field trials in order to provide future customers with a set of best-practise-rules for the optimal sizing, construction and running of their mCHCP plant.

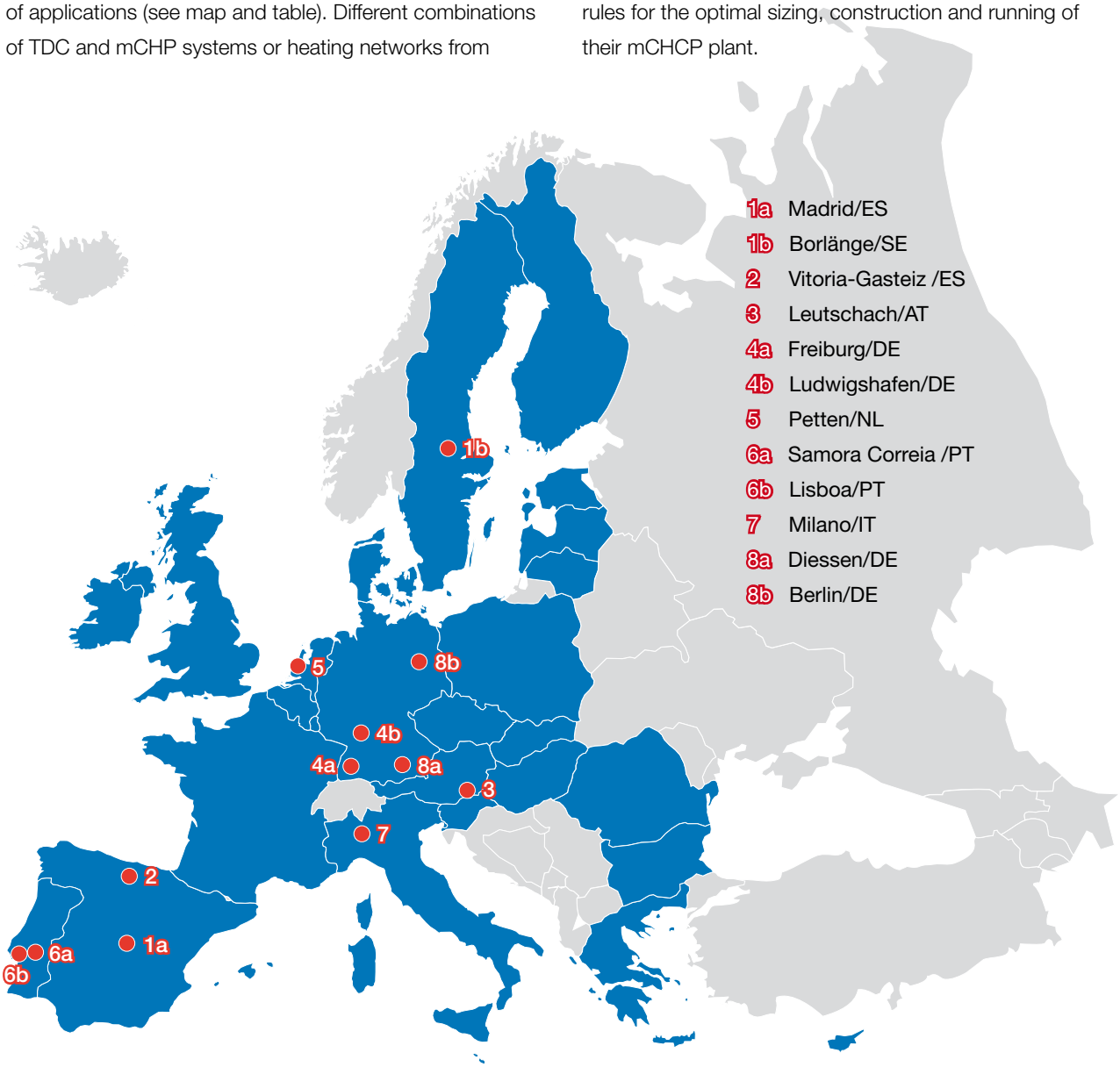

PolySMART DEMONSTRATION SYSTEMS

	Location	Responsible partner	Application	Distribution	Thermal driven cooling	Micro-CHP	Heat rejection system	Storage(s)
1a	Madrid, ES	BESEL, S.A.	recreation center	warm and cold air	ClimateWell (10 kW_c)	Senertec (5.5 kW_e, nat gas)	wet cooling tower	internal chemical storage
1b	Borlänge, SE	SERC	administration building	heating loop, warm and cold air	ClimateWell (10 kW_c)	district heating	dry cooling tower (option: spray)	internal chemical storage
2	Vitoria-Gasteiz, ES	IKERLAN	laboratory hall	heating + chilled water	Rotartica (4,5 kW_c)	Senertec (5.5 kW_e, nat gas)	dry cooling tower + boreholes	hot + chilled water
3	Leutschach, AT	Joanneum Research	winery process	industrial application	Pink (10 kW_c)	Stirling (3 kW_e)	wet cooling tower	hot + chilled water
4a	Freiburg, DE	Fraunhofer ISE	offices	air-conditioning	Sortech (2*5.5 kW_c)	Tedom (8 kW_e)	dry cooling tower (option: spray)	hot + chilled water
4b	Ludwigshafen, DE	Fraunhofer ISE	utility facility	heating + chilled water	Sortech (5.5 kW_c)	district heating	dry cooling tower (option: spray)	-
5	Petten, NL	ECN	research house	heating + chilled water	Ecool (2,5 kW_c)	1 kW_e mCHP	dry cooler	hot water
6a	Samora Correia, PT	Ineti/AoSol	offices	heating + chilled water	Aosol (8 kW_c)	Senertec (5.5 kW_e, LPG)	internal	hot water
6b	Lisboa, PT	Ineti/AoSol	office building	heating + cooling loop	Aosol (8 kW_c)	biodiesel engine	internal	hot + chilled water
7	Milano, IT	Polimi	laboratory hall	air-conditionning	Robur (17.8 kW_c) + DEC-system	Avesco (52 kW_e, nat gas)	internal	hot + chilled water
8a	Diessen, DE	ZAE Bayern	store, showroom	heating + chilled water	Sonnenklima (10 kW_c)	Senertec (2*5.5 kW_e, LPG + rapeseed oil)	dry cooling tower	hot water
8b	Berlin, DE	TU Berlin	computer centre	heating + chilled water	Sonnenklima (10 kW_c)	district heating	dry cooling tower	chilled water

Overview of the 8 PolySMART demonstration projects with their technical characteristics

Four of the demo systems are described in further detail in the following pages.

Demo project 1a: Madrid, Spain

Partners: BESEL, Climatewell, FSKAB, SERC

DESCRIPTION

The mCHCP installation is located in the municipal Sport Centre “La Cantera”, in Leganés (Madrid).

The system is based on a combination of a SENERTEC DACHS natural gas motor (5.5 kW_e-12.5 kW_t) and a CLIMATEWELL CW10 chemical heat pump. It provides air heating and cooling for the main entrance hall, where the existing central services of the building are not available. The hall is about 100 m^2 but has an important volume, as the central part is opened to a second floor. It is the central point of the complex, which is open all day long from Monday to Saturday (9-22:30h), and until midday on Sunday (9-14:30h).

EXPERIENCES

The installation has been running since October 2008, and has provided heating services throughout the winter, with CHP running about 12 hours a day.

The cooling period is now underway and the first results of the combination between DACHS mCHP and Climatewell TDC look very promising, as the micro cogeneration unit provides a constant heat source to the TDC, which allows continuous cooling cycles.

The demo project 1a system provides air heating and cooling for the entrance hall of a sports centre in Madrid.

TDC (left) and CHP (right) units of demo project 1a

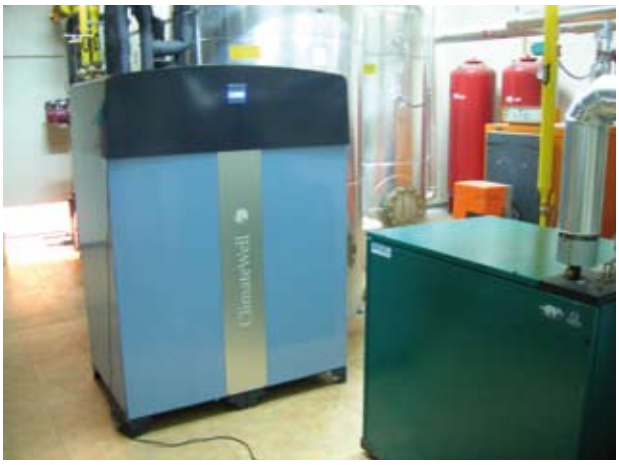

Demo project 3: Leutschach, Austria

Partners: Wintery Peitler, Joanneum, Pink, Solid, Schneid, TEC

DESCRIPTION

The trigeneration system at the winery Peitler in Austria uses solar heat and solid biomass to produce heat, cold and power to meet the specific needs of an Austrian winery. In summer, an ammonia-water chiller uses solar heat to cool and dehumidify wine bottle storage. In winter, a wood chip furnace with a coupled Stirling engine prototype is used to produce heat and power. The heat is used to drive the ammonia-water chiller to produce cold for the fermentation process of the wine.

TDC: 10 kW_c
Stirling: 3 kW_e
Wood chip furnace: 50 kW_t
Solar collector field: 100 m^2
Wet cooling tower: 26 kW_t

EXPERIENCES

The ammonia-water chiller has now been in operation for 6 years without maintenance. The Stirling engine prototype was successfully tested and will be in automatic operation, starting in autumn 2009.

The system in demo project 3 produces heat, cold and power for a winery in southern Austria.

Demo project 4b: Ludwigshafen, Germany

Partners: TWL, Fraunhofer ISE, SorTech

DESCRIPTION

The trigeneration system of subproject 4b consists of a small thermally driven adsorption chiller (SorTech AG) which operates with the working pair silicagel - water. The heat source is a district heating grid fed by a centralised CHP unit (waste incineration plant). Therefore, the thermal driving power of the system is constantly provided. The heat rejection system is a 20 kW dry cooling tower with an optional water spray function for peak loads. The installation is integrated in an existing air-handling unit which supplies the canteen of Technische Werke Ludwigshafen (TWL). Thus it is installed in a real application, although the decentralised TDC unit is too small for covering the actual loads. This allows the analysis of different operating combinations for identifying an optimised system's performance within the district heating configuration. The TDC unit is examined under base load conditions as peak demands are covered by the existing system.

Demo project 4b has been erected at the premises of TWL and is being monitored by the Fraunhofer ISE.

EXPERIENCES

District heating is considered a feasible heat source for supplying driving energy, as the energy is supplied with very constant characteristics. The installation has been running more or less constantly since November 2007. Changing the heat transfer fluid from a water/glycol mixture to pure water caused a significant increase in operating performance. During the course of the project minor constructional modifications have been conducted in positioning of monitoring devices to optimise data acquisition and analysis.

TDC unit of demo project 4b at Ludwigshafen

Canteen of Technische Werke Ludwigshafen, partly cooled by the mCHP system

Demo project 8b: Berlin, Germany

Partners: TU Berlin, Sonnenklima

DESCRIPTION

PolySMART demonstration installation 8b, located in Berlin, is designed to operate 24 hours, 7 days a week. The main target is to prove the capability of decentralized district heat-based cold production to guarantee cold for data centers while minimising operation costs and maintenance effort.

The system is driven by Berlin's district heat network (fed temperature: 105°C). Its nominal operation conditions are 7/14°C cold water, 35/45°C reject heat and 105/75°C driving heat. The chiller has a capacity of 8 kW_c and produces cold which is used in the data center, in seminar rooms, in PC-pools and in a conference room.

Waste heat is rejected by a single dry fan coil system on the rooftop during the summer, while in winter the reject heat is used as heat input to the building entrance and laboratory areas. In the winter, the absorption process operates simultaneously as chiller and heat pump, reaching a thermal COP in the range of 2. During low demand periods, cold water storage takes over the supply of cold and the chiller shuts off. This results in higher thermal efficiency of the absorption chiller and higher electrical efficiency (due to pumps, control, etc.) of the overall system.

EXPERIENCES

First results in summer 2009 show the potential for primary energy savings of 16% and CO_2 savings of 25% as compared to a standardised electrically driven reference system. Several optimisation steps are planned (fluid flow control, control design, temperature levels, predictive operation) and primary energy savings of up to 40% are foreseen.

Demo project 8b:
buildings of Technical University Berlin

Design guidelines

EARLY FEASIBILITY STUDY

Whenever the possibility of building a CHCP installation arises, an early feasibility study should be realised, based on the load analysis of the targeted application.

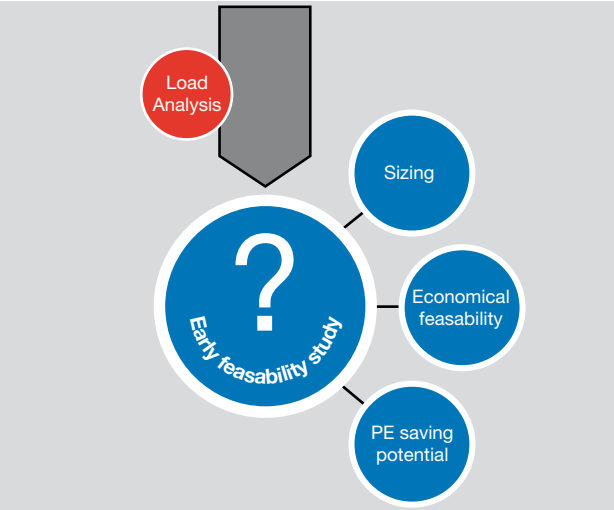

An early feasibility study is very important for the assessment of CHCP installations

The sizing of the key components (CHP´s electrical capacity, TDC´s capacity and storage volumes) is a key factor: Depending on the boundary conditions of each case, a minimum number of hours of heating and cooling at full load are required to make a CHCP economically and energetically feasible. For this reason, full heating/cooling loads are not normally covered by the CHP and the TDC, and auxiliary devices are provided to cover the rest of the load. However, very small systems could be reasonably designed without back-up in order to limit the effort in the machinery.

KEY DESIGN ISSUES

- **Electrical efficiency of the CHP** is a very sensitive key parameter. Primary energy savings can only be achieved with high CHP electrical efficiencies.

- **Electrical parasitic consumption** can play an important negative role. This must be taken into account in the early feasibility study, and in the design phase, especially when selecting the heat rejection unit, pumps and other auxiliary components. High efficiency pumps are a must in a CHCP plant.

- **TDC fired by back-up?:** Do not operate TDC with a backup boiler. The primary energy consumption would be higher in comparison to conventional technologies.

- **Matching between TDC & CHP** is currently still complicated. Not only capacity, but also temperature and flow ranges must be matched. Variable capacity CHPs are considerably easier to match with a TDC.

- **Integration of storage:** heat and/or cold storage can be necessary to reduce the variability of the load profiles, to limit the number of times the CPH is turned on and off, and to help match the TDC & CHP.

Conclusions

Our work within **PolySMART** shows that the main components of small-scale CHCP systems are mature. But the combination of the components and the planning, installation and operation of entire small-scale CHCP systems is still rare and remains challenging. This has consequences for the different target groups.

In a building process, **architects and planners** have to assess and compare different technical solutions for providing indoor comfort and energy supply. CHCP technology may be a viable solution. Key design issues are described on the previous page of this brochure. In future, appropriate computer models and tools will become available, which will help to take solid decisions within the planning process and assess whether or not CHCP is a promising solution for a particular building.

Small-scale CHCP can provide an interesting solution to reduce peak electricity consumption, particularly in summer when high cooling loads, e.g. in southern countries, create high peak demands. Depending on the existing energy infrastructure, CHCP can also provide a CO_2 saving alternative. For **decision makers in the field of energy policy**, those arguments are critical when it comes to decisions regarding the future energy infrastructure. Supporting schemes which enhance the economic viability of CHCP solutions should be considered as an interesting option which might provide an alternative to the installation of new centralized power plants. Of course, provision of supporting funding should depend on the fulfilment of minimum requirements regarding the energy and/or CO_2 saving.

Results of our work indicate that there is a significant potential for further improvement of CHCP performance on the system level. CHCP is a complex technology and requires much more standardisation regarding coupling of the key components and the development of robust, standardized solutions in future. Therefore, R&D on system optimisation and accompanying measures (e.g. development of tools for planners) is important for future **decision making in energy R&D**. Besides work on the system level, R&D on the component level will enhance overall performance in terms of energy and costs.

Decentralised, small-scale thermally driven cooling may become an interesting option for **utilities and district heating companies**. CHCP solutions with centralised CHP plants and decentralised, thermally driven cooling systems will help to reduce peak electricity demand due to cooling and at the same time allow a much better exploitation of the district heating network during summer. However, adjustments on both sides – the network and the TDC – are needed in order to provide reliable and optimised overall solutions.

For **end-users**, reliable CHCP solutions exist in the large and medium capacity range, i.e. systems with several hundred kW of capacity or more. Initial solutions exist in the small-scale capacity range, but the end-user should be aware that a high level of expertise is necessary at all levels of the design and installation process in order to achieve an efficient system which guarantees long-term, reliable operation.

The PolySMART project

PolySMART is an Integrated Project partly funded by the European Commission under FP6, DG “Energy and Transport“

Priority: SUSTDEV-1.1.4 - POLYGENERATION Demonstration Projects, Contract No.: 019988

Start: 12.06.2006 - End: 11.06.2010

PROJECT STRUCTURE

WP7	**Co-ordination** Fraunhofer ISE (Hans-Martin Henning)
WP1	**System Classification** Fraunhofer ISE (Tomas Núñez) + Uni Malta (Mario Fsadni)
WP2	**Potentials & markets** Polimi (Marcello Aprile)
WP3	**Demonstration projects Fraunhofer ISE** (Benoit Sicre, Tomas Núñez)
WP4	**Technical Assessment and Design Guidelines** Ikerlan (Maider Usabiaga)
WP5	**Engineering Tools** ECN (Ernst-Jan Bakker)
WP6	**Training & Dissemination** PSE (Andreas Häberle)

SP1a	BESEL (Olivier Guitteny)
SP1b	SERC (Chris Bales)
SP2	Ikerlan (Bakartxo Egilegor)
SP3	Joanneum (Reinhard Padinger)
SP4a	Fraunhofer ISE (Matth. Schicktanz)
SP4b	Fraunhofer ISE (Christine Weber)
SP5	ECN (Ernst-Jan Bakker)
SP6a+b	Ineti/AoSol (João Farinha Mendes)
SP7	Polimi (Marcello Aprile)
SP8a	ZAE Bayern (Christian Schweigler)
SP8b	TU Berlin (Stefan Petersen)

PARTNERS

AO SOL - Energias Renováveis, LDA., Portugal
Avesco AG, Switzerland
Bavarian Center for Applied Energy Research, Germany
Behältertechnik Pink Ges.m.b.H., Austria
Besel S.A., Spain
ClimateWell AB, Sweden
Energy research Centre of the Netherlands, Netherlands
EuroSolar - Energias Alternativas, Lda., Portugal
FA. TEC Thermic Energy-systems & Consulting GmbH, Austria
Fraunhofer ISE, Germany
Fredrik Setterwall, Konsult AB, Sweden
Högskolan Dalarna, Sweden
IKERLAN Technological Research Centre, Spain
Instituto Nacional de Engenharia, Tecnologia e Inovacao, Portugal
Joanneum Research-Forschungsgesellschaft m.b.H., Austria
Kungliga Tekniska Högskolan, Sweden
M.Conde Engineering, Switzerland
National Energy Conservation Agency, Poland
Politecnico di Milano, Italy
PSE AG – projects in solar energy, Germany
ROBUR S.p.A., Italy
Rotartica / Fagor, Spain
Schneid GmbH, Austria
S.O.L.I.D. Gesellschaft für Solarinstallation und Design m.b.H., Austria
Sonnenklima, Germany
Sortech Aktiengesellschaft, Germany
Swiss Federal Laboratories for Materials Testing and Research, Switzerland
Technische Universität Berlin, Germany
Technische Werke Ludwigshafen am Rhein Aktiengesellschaft, Germany
TEDOM-VKS s.r.o., Czech Republic
University of Malta, Malta
Weingut Peitler, Austria

For more information please contact:

Fraunhofer ISE

Coordinator
Dr. Hans-Martin Henning
Fraunhofer Institute for Solar Energy Systems ISE
Heidenhofstr. 2
79110 Freiburg / Germany
Tel. +49 (0) 7 61 / 45 88 - 0
E-Mail: info@polysmart.org

www.polysmart.org

PolySMART®