Manual for Structural Assessment for Installation of Solar Water Heating in Domestic Dwellings

1. Objective

1.1 This manual provides for the structural assessment of domestic timber framed dwellings for the installation of solar panels (collectors) and solar store tanks on the roof. It is intended to supplement NZS3604 and identify when specific engineering design will be required.

1.2 It is intended that the sections may be called up in the Approved Documents as an Acceptable Solution for meeting the requirements of the New Zealand Building Code for Structure B1.3.1; B1.3.2, B1.3.4 for loads from 13.1.3.3 (a), (b), (f), (g), (h), (j), (m), (p) and (q). i.e. for loads arising from gravity, earthquake, snow, wind and human impact, differential movement, non-structural elements and contents and creep and shrinkage.

2. Scope

2.1 Buildings covered by this manual shall be as covered by NZS3604 with the additional limitations prescribed herein.

2.2 This manual does not cover the structural support and fixing of the Collector panels or Solar Store tanks, any piping or other penetrations to the roof surface. The supplier of the relevant items shall provide design and details for the roof top-side installation.

2.3 Collectors are assumed to be approximately $1m^2$, weigh not over 30kg and to each be supported onto two rafters.

2.4 Solar Store Tanks may be 180l, 300l or 450l capacity weighing not more than 250kg, 400kg or 600kg respectively when full. Each tank and its frame shall be supported over 2 rafters.

2.5 Collectors may be installed side by side across the roof pitch.

2.6 Collectors shall not be installed side by side up/down the roof slope.

2.7 Solar Store Tanks may not be installed over the same rafters as the Collector tanks.

2.8 Solar Store Tanks may not be installed on rafters supported by a Ridge Beam unless it is demonstrated as satisfactory by Specific Engineering Design.

3. Timber in Structures

3.1 Current growth Radiata Pine, while graded as No.1 framing has been shown to have a lower stiffness and strength to similarly graded timber produced even as recently as 5 or 6 years ago. In recognition of the

lower stiffness and its increased deflection Tables have been produced for structures erected pre 2000, or from 2000 onwards.
Verification procedures for No.1 framing are proposed. New rafters with Timbers that can be shown as having an average E = 8 GPa for bending about the major axis may use the tables for pre 2000.

4. Collectors

4.1 Collectors may be installed on roofs with the configurations shown in fig 1a– 1e and as noted in Table 1.

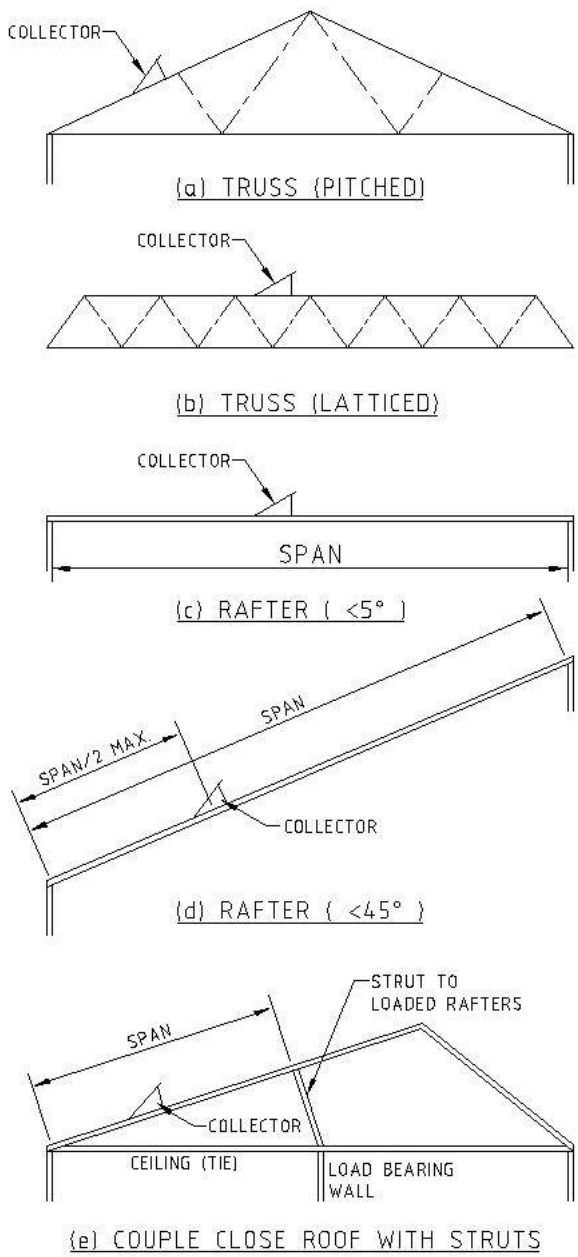

Fig 1 Roof Structures for Collectors

Note: All members are to be supported on lintels (subject to specific engineering design) or walls. Walls are to be supported at floor/ foundations as required by NZS3604 for Load Bearing Walls. Posts supporting lintels are to be supported down to foundations.

4.2 Where more than 10 Collectors are to be installed, a check for seismic bracing (wall and subfloor) is required. For a roof height of up to 5m above ground provide 15 bracing units/ 10 collectors. For a roof height over 5m provide 30 bracing units/ 10 collectors. Seismic bracing shall be supplied along each major building axis where more than 50 bracing units are required.

Roof Type Cladding	**Trusses (Bolted or Nail Plated)**		**Rafters**		**Ridge Beams Lintels**
	Pitched Roof	**Parallel Chord**	**Sloping**	**Flat**	
Heavy	OK[1]	OK[1]	OK[1]	NA	OK[1]
Light Pre2000	Check chords as for rafters – Table 3		Check at table 3		OK[1]
Light 2000 on	Check chords as for rafters – Table 2		Check at table 2		

Table 1 – Collectors Location – Design Check

Note [1] Additional load not critical to the structure

4.3 Bracing requirements in Zones B and C may be reduced to 83% and 50% respectively of the requirements in 4.2

4.4 Where existing rafters are inadequate the addition of rafters to comply with Table 3 will provide necessary support for the Collectors.

Span Limitation Table.
For lightly clad roofs. **Rafter Spans**

	flat aspect			roof slope = 15°			roof slope = 30°			roof slope = 45°		
	600 spacing	900	1200	600 spacing	900	1200	600 spacing	900	1200	600 spacing	900	1200
	rafter spans			rafter spans			rafter spans			rafter spans		
Call Sizes mm	*l max mm*	*l max mm*	*l max mm*	*l max mm*	*l max mm*	*l max mm*	*l max mm*	*l max mm*	*l max mm*	*l max mm*	*l max mm*	*l max mm*
125 X 40	1430	1340	1270	1560	1460	1380	1400	1310	1230			
150 X 40	1830	1700	1600	2000	1850	1740	1790	1650	1560	1460	1350	1270
125 X 50	1590	1480	1400	1730	1610	1520	1560	1450	1360	1270	1180	1110
150 X 50	2030	1880	1770	2210	2040	1910	1980	1830	1710	1620	1490	1400
200 X 50	2940	2690	2510	3190	2900	2710	2860	2600	2430	2330	2130	1980
250 X 50	3870	3510	3270	4180	3780	3510	3750	3390	3140	3060	2770	2570
300 X 50	4810	4340	4020	5180	4660	4310	4640	4180	3860	3790	3410	3160
100 X 75	1360	1380	1210	1490	1390	1310	1330	1240	1180			
125 X 75	1860	1720	1620	2020	1870	1750	1810	1670	1570	1480	1370	1280
150 X 75	2360	2280	2660	2560	2350	2200	2300	2110	1970	1880	1720	1610
200 X 75	3400	3100	2890	3680	3340	3100	3300	2990	2780	2690	2440	2270
250 X 75	4460	4030	3740	4800	4330	4010	4310	3880	3590	3520	3170	2940
300 X 75	5520	4970	4590	5940	5330	4920	5330	4780	4410	4350	3900	3600

Table 2 – Rafters – 2000 on

Span Limitation Table.
For lightly clad roofs. **Rafter Spans**

	flat aspect			roof slope = 15°			roof slope = 30°			roof slope = 45°		
	600 spacing	900	1200	600 spacing	900	1200	600 spacing	900	1200	600 spacing	900	1200
	rafter spans			rafter spans			rafter spans			rafter spans		
Call Sizes mm	*l max mm*	*l max mm*	*l max mm*	*l max mm*	*l max mm*	*l max mm*	*l max mm*	*l max mm*	*l max mm*	*l max mm*	*l max mm*	*l max mm*
125 X 40	1580	1480	1400	1720	1600	1510	1550	1440	1360			
150 X 40	2020	1870	1760	2200	2030	1900	1970	1820	1710	1610	1480	1390
100 X 50	1290	1210	1150	1410	1320	1250	1260	1180	1120			
125 X 50	1760	1630	1540	1910	1770	1670	1720	1590	1500	1400	1300	1220
150 X 50	2240	2070	1940	2430	2240	2090	2180	2010	1880	1780	1640	1530
200 X 50	3240	2950	2750	3500	3180	2960	3130	2850	2650	2560	2330	2160
250 X 50	4240	3840	3560	4570	4130	3820	4100	3700	3430	3350	3020	2800
300 X 50	5260	4740	4380	5660	5080	4690	5070	4560	4210	4140	3720	3440
100 X 75	1510	1410	1330	1640	1530	1440	1470	1370	1290	1200	1120	1060
125 X 75	2050	1890	1780	2230	2050	1920	1990	1840	1720	1630	1500	1410
150 X 75	2600	2390	2240	2820	2580	2410	2530	2310	2160	2060	1890	1760
200 X 75	3730	3390	3150	3680	3650	3390	3610	3270	3040	2950	2670	2480
250 X 75	4880	4400	4080	4800	4730	4370	4710	4240	3920	3840	3460	3200
300 X 75	6040	5420	5000	6480	5810	5350	5810	5210	4800	4750	4250	3920

Table 3 - Rafters – Roofs Pre 2000

5. Solar Store Tanks

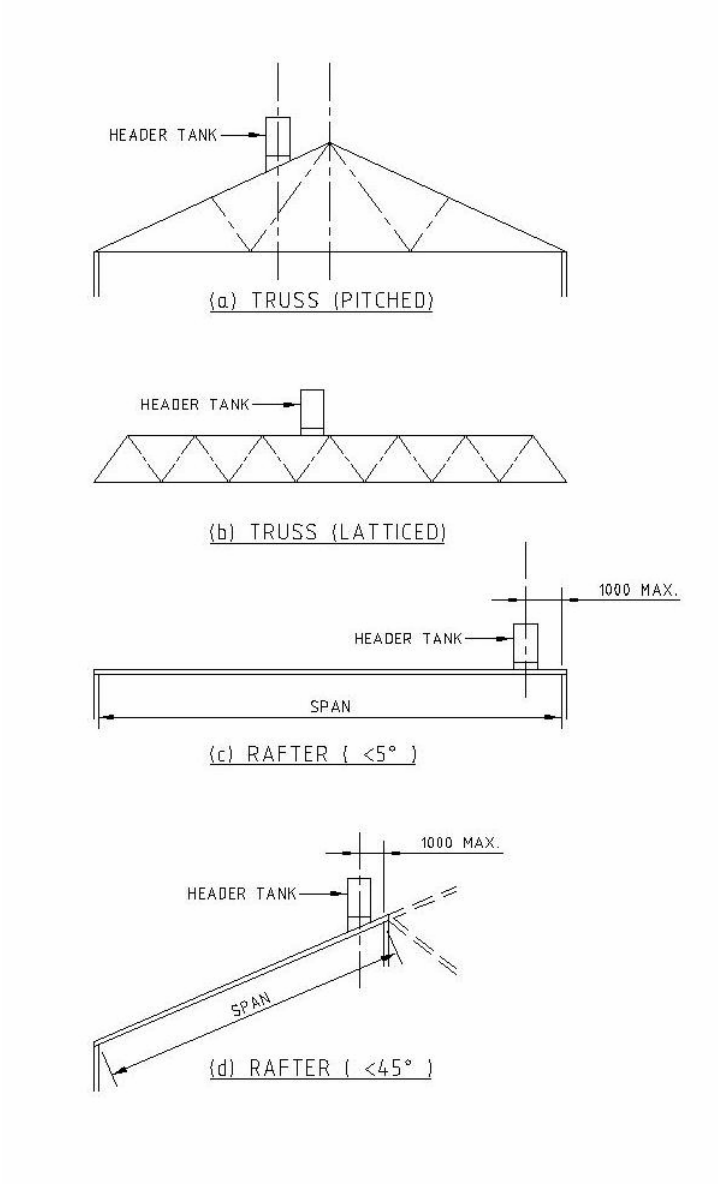

Fig 2 Roof Structures for Solar Store Tanks

Note: All members to be supported on lintels (subject to specific engineering design) or walls. Walls are to be supported at floor/ foundations as required by NZS3604 for Load Bearing Walls. Posts supporting lintels are to be supported down to foundations.

	Trusses	**Rafters**	
Heavy Roof	Specific Engineering Design	2000 on	Pre 2000
		Specific Engineering Design	
Light Roof		Table 5	Table 6

Table 4 –Solar Store Tank – Design Check

5.1 Solar Store tanks up to 300l capacity in the roof space shall be supported over walls as in Figure 3. Installation of 450l tanks in the roof space requires specific engineering design

5.1 Solar Store tanks require to be held against seismic loads. The base of the tank must be held against sliding. Tanks that have a height to diameter ratio in excess of 1:1.5 shall also be restrained to prevent overturning. The lateral securing force for the tanks shall be as in Table 7 – in two orthogonal directions.

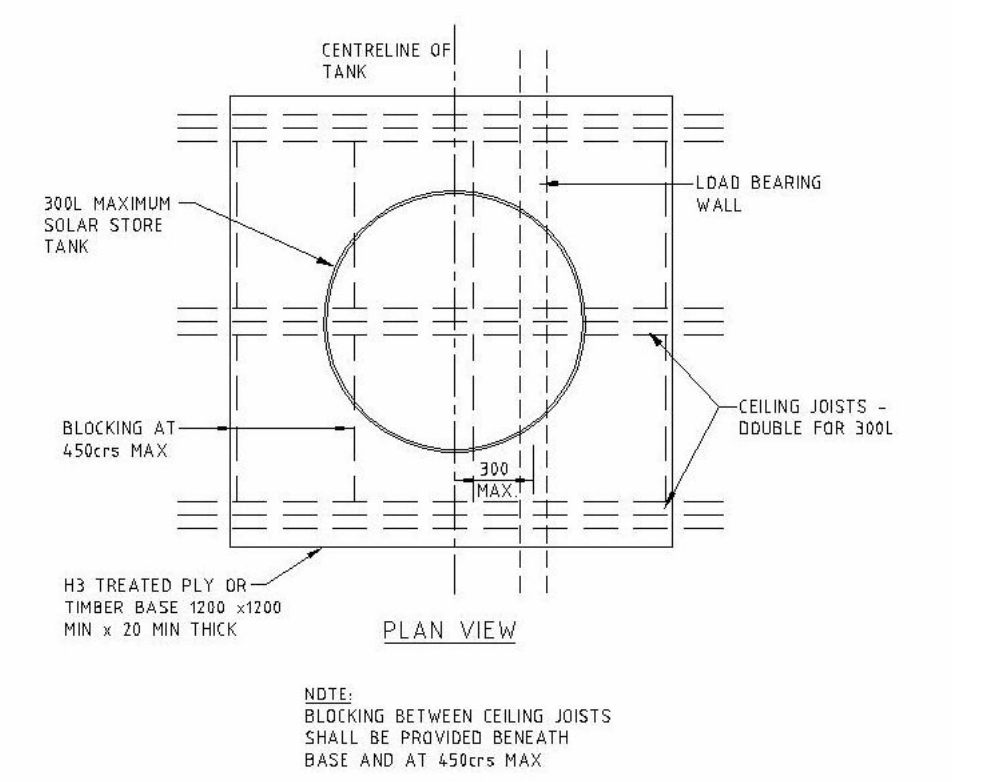

Fig 3 – Support of store tanks in the roof space

Span Limitation Table.
For lightly clad roofs. **Rafter Spans - flat roofs**

	220kg cylinder			340kg cylinder			520kg cylinder		
	600 spacing	900	1200	600 spacing	900	1200	600 spacing	900	1200
Flat aspect.	rafter spans			rafter spans			rafter spans		
Call Sizes mm	*l max mm*	*l max mm*	*l max mm*	*l max mm*	*l max mm*	*l max mm*	*l max mm*	*l max mm*	*l max mm*
150 X 50	1350	1340	1340						
200 X 50	1710	1690	1680	1590	1580	1570	1510	1500	1500
250 X 50	2390	2340	2300	2120	2100	2070	1940	1930	1910
300 X 50	3440	3320	3210	3000	2920	2860	2680	2630	2590
125 X 75	1310	1300	1300						
150 X 75	1450	1440	1430						
200 X 75	2000	1970	1940	1810	1800	1780	1690	1680	1670
250 X 75	3010	2920	2840	2630	2580	2530	2360	2330	2300
300 X 75	4430	4200	4020	3880	3730	3610	3450	3350	3270

Span Limitation Table.
For lightly clad roofs. **Rafter Spans of 15° slope.**

	220kg cylinder			340kg cylinder			520kg cylinder		
	600 spacing	900	1200	600 spacing	900	1200	600 spacing	900	1200
	rafter spans			rafter spans			rafter spans		
Call Sizes mm	*l max mm*	*l max mm*	*l max mm*	*l max mm*	*l max mm*	*l max mm*	*l max mm*	*l max mm*	*l max mm*
150 X 50	1460	1450	1440						
200 X 50	2090	2060	2030	1880	1860	1840	1740	1730	1710
250 X 50	3230	3120	3020	2810	2750	2690	2520	2480	2440
300 X 50	4760	4480	4270	4190	4010	3860	3730	3610	3510
125 X 75	1380	1370	1370	1330	1320	1310			
150 X 75	1630	1620	1610	1520	1510	1500			
200 X 75	2590	2530	2470	2280	2250	2210	2070	2050	2030
250 X 75	4160	3950	3790	3630	3510	3400	3230	3150	3070
300 X 75	6030	5590	5270	5410	5090	4840	4870	4640	4460

Rafter Spans of 30° slope.

	220kg cylinder			340kg cylinder			520kg cylinder		
	600 spacing	900	1200	600 spacing	900	1200	600 spacing	900	1200
	rafter spans			rafter spans			rafter spans		
Call Sizes mm	*l max mm*	*l max mm*	*l max mm*	*l max mm*	*l max mm*	*l max mm*	*l max mm*	*l max mm*	*l max mm*
200 X 50	1870	1840	1820	1680	1670	1650	1560	1550	1540
250 X 50	2890	2790	2710	2520	2460	2410	2260	2220	2190
300 X 50	4270	4020	3830	3760	3590	3460	3350	3240	3140
150 X 75	1460	1450	1440						
200 X 75	2320	2270	2220	2040	2010	1980	1850	1830	1820
250 X 75	3730	3540	3400	3260	3140	3050	2900	2820	2760
300 X 75	5400	5010	4720	4850	4560	4340	4370	4160	4000

Rafter Spans of 45° slope.

	220kg cylinder			340kg cylinder			520kg cylinder		
	600 spacing	900	1200	600 spacing	900	1200	600 spacing	900	1200
	rafter spans			rafter spans			rafter spans		
Call Sizes mm	*l max mm*	*l max mm*	*l max mm*	*l max mm*	*l max mm*	*l max mm*	*l max mm*	*l max mm*	*l max mm*
200 X 50	1530	1500	1480						
250 X 50	2360	2280	2210	2060	2010	1970	1840	1810	1790
300 X 50	3480	3280	3130	3070	2930	2820	2730	2640	2570
200 X 75	1900	1850	1810	1670	1640	1620	1510	1500	1480
250 X 75	3040	2890	2770	2660	2570	2490	2360	2300	2250
300 X 75	4410	4090	3860	3960	3720	3540	3570	3400	3260

Table 5 Pre 2000

Span Limitation Table.

For lightly clad roofs. **Rafter Spans - Flat roof**

	220kg cylinder			340kg cylinder			520kg cylinder		
	600 spacing	900	1200	600 spacing	900	1200	600 spacing	900	1200
Flat aspect.	rafter spans			rafter spans			rafter spans		
Call Sizes mm	*l max mm*	*l max mm*	*l max mm*	*l max mm*	*l max mm*	*l max mm*	*l max mm*	*l max mm*	*l max mm*
150 X 50	1410	1400	1400						
200 X 50	1880	1860	1840	1720	1710	1700	1620	1610	1600
250 X 50	2760	2690	2630	2430	2390	2350	2200	2170	2150
300 X 50	4050	3870	3720	3540	3420	3330	3140	3070	3010
125 X 75	1350	1350	1340						
150 X 75	1540	1530	1520	1460	1450	1450	1410	1400	1400
200 X 75	2260	2220	2190	2020	2000	1980	1860	1850	1830
250 X 75	3530	3400	3290	3080	3000	2930	2750	2700	2650
300 X 75	5190	4880	4640	4590	4370	4200	4100	3950	3830

Rafter Spans of 15° slope.

	220kg cylinder			340kg cylinder			520kg cylinder		
	600 spacing	900	1200	600 spacing	900	1200	600 spacing	900	1200
	rafter spans			rafter spans			rafter spans		
Call Sizes mm	*l max mm*	*l max mm*	*l max mm*	*l max mm*	*l max mm*	*l max mm*	*l max mm*	*l max mm*	*l max mm*
150 X 50	1380	1370	1360	1320	1320	1310			
200 X 50	1860	1830	1810	1690	1680	1670	1590	1580	1570
250 X 50	2750	2680	2620	2410	2370	2340	2180	2150	2130
300 X 50	4050	3860	3700	3540	3420	3320	3140	3070	3000
125 X 75	1320	1310	1310						
150 X 75	1510	1500	1490	1430	1420	1410			
200 X 75	2240	2200	2170	2000	1980	1960	1840	1820	1810
250 X 75	3530	3390	3280	3070	2990	2920	2740	2690	2640
300 X 75	5180	4850	4610	4590	4360	4190	4100	3950	3820

Rafter Spans of 30° slope.

	220kg cylinder			340kg cylinder			520kg cylinder		
	600 spacing	900	1200	600 spacing	900	1200	600 spacing	900	1200
	rafter spans			rafter spans			rafter spans		
Call Sizes mm	*l max mm*	*l max mm*	*l max mm*	*l max mm*	*l max mm*	*l max mm*	*l max mm*	*l max mm*	*l max mm*
200 X 50	1660	1640	1620	1520	1510	1500			
250 X 50	2470	2400	2350	2170	2130	2090	1960	1930	1910
300 X 50	3630	3460	3320	3170	3060	2970	2820	2750	2690
150 X 75	1350	1340	1340						
200 X 75	2010	1970	1940	1790	1770	1750	1650	1640	1620
250 X 75	3160	3040	2940	2760	2680	2620	2460	2410	2370
300 X 75	4650	4350	4130	4120	3910	3750	3680	3540	3420

Rafter Spans of 45° slope.

	220kg cylinder			340kg cylinder			520kg cylinder		
	600 spacing	900	1200	600 spacing	900	1200	600 spacing	900	1200
	rafter spans			rafter spans			rafter spans		
Call Sizes mm	*l max mm*	*l max mm*	*l max mm*	*l max mm*	*l max mm*	*l max mm*	*l max mm*	*l max mm*	*l max mm*
200 X 50	1663	1342	1327	1241	1231	1221			
250 X 50	2469	1962	1916	1768	1737	1709	1596	1577	1559
300 X 50	3632	2823	2711	2589	2501	2426	2302	2245	2196
150 X 75	1355								
200 X 75	2012	1613	1586	1465	1448	1432			
250 X 75	3165	2481	2398	2250	2189	2137	2005	1967	1933
300 X 75	4647	3553	3374	3361	3195	3065	3002	2889	2797

Table 6 2000 on

Tank Capacity

Height	180l (220kg)	300l (340kg)	600l (680kg)
Roof height <5m to lowest ground	1.0kN	1.5kN	3.0kN
Roof height >5m to lowest ground	2.0kN	2.5kN	4.5kN

Table 7 – Above roof lateral restraints (each way) to each solar store tank

5.2 Wall and subfloor bracing should also be applied along each major axis as required in Table 8.

Tank Capacity

Roof Height to Lowest Ground	180l (220kg)	300l (340kg)	600l (680kg)
Roof height <5m to lowest ground	N/A	N/A	75bu
Roof height >5m to lowest ground	N/A	50bu	90bu

Table 8 – Wall bracing each way, for each solar store tank, each level

5.3 Restraint and bracing requirements in seismic zones B and C may be reduced to 83% and 50% respectively in these zones of the above values, but need not apply for a demand of less than 50bu..

6 Conclusion

6.1 The above-roof installation requirements for collectors and solar store tanks are to be detailed by the supplier of the relevant proprietary elements.

6.2 Tables have been provided to indicate where installation may be undertaken without requiring specific engineering design.

6.3 For existing structures the actual construction must be inspected and member sizes, spans, supports (walls, floors, foundations) all verified and checked for compliance with NZS3604 (where appropriate). Rafter sizes and spans will need to be checked against Table 2 and 3 for Collectors and 5 and 6 for Solar Store Tanks.

6.4 The vertical load path down to foundations for support of Solar Store tanks must be confirmed.

6.5 Bracing demand and supply require to be checked.

APPENDIX

Definitions

Building height: The height, measured in metres, from lowest ground level to highest point of the roof

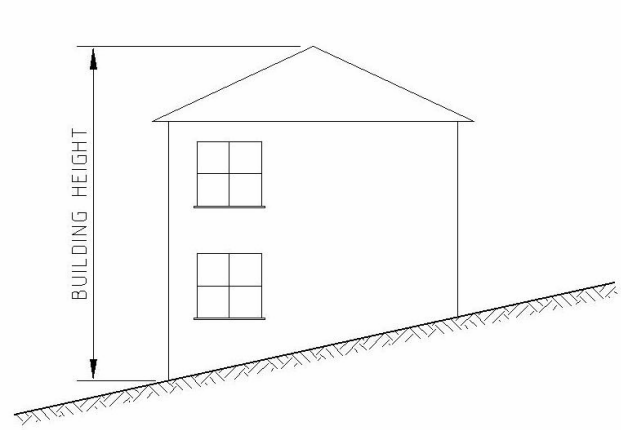

Fig. A1

Bracing Any method employed to provide lateral support to a Building

Bracing Capacity Strength of *bracing* of a whole building or of elements within a building. *Bracing capacity* is measured in *Bracing Units*, BUs.

Bracing Demand The horizontal forces resisted by a whole building or by an element within a building. These horizontal forces are a result of wind or earthquake action. *Bracing demand* forces are measured in *'Bracing Units'*, BUs.

Bracing Unit (BU) A *bracing unit* is a measure of

(a) The horizontal force (*bracing demand*) on the building (1kilonewton is equal to 20 *Bracing Units*)

(b) The resistance to horizontal force (*bracing capacity*) of building elements

Framing Timber members to which lining cladding, flooring or decking is attached or which are depended upon for supporting the structure, or for resisting forces applied to it.

Heavy Roof A roof with roofing material (cladding and any sarking) having a mass exceeding 20kg, but not exceeding 60kg/m^2 of roof area. Typical examples are concrete tiles, slates and the like.

Light Roof A roof with roofing material (cladding and any sarking) having a mass not exceeding 20kg/m^2 of roof area. Typical examples are steel, copper, and aluminium claddings of normal thickness, 6mm thick cellulose cement tiles, 6mm thick corrugated cellulose cement, and the like, without sarking.

Lintel A horizontal *framing* timber spanning an opening in a wall.

Pile A block or column-like member used to transmit loads from the building and its contents to the ground.

Pitched Roof A roof having its exterior surface at an angle of 10° or more to the horizontal (that is a slope of 1 in 6 or steeper).

Purlin includes Tile Batten A horizontal member laid to span across *rafters* or trusses and to which the roof cladding is attached.

Ridge Beam A *framing* timber normally parallel to the slope of the roof and providing support for sarking, *purlins* or roof covering.

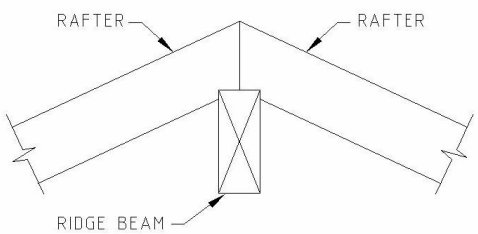

Fig. A2

Seismic Zone Refer to Fig A3 for New Zealand Seismic Zones. This document provided basic demand for Zone A.

Specific Engineering Design (SED) Requires calculation and design beyond the scope of this document.

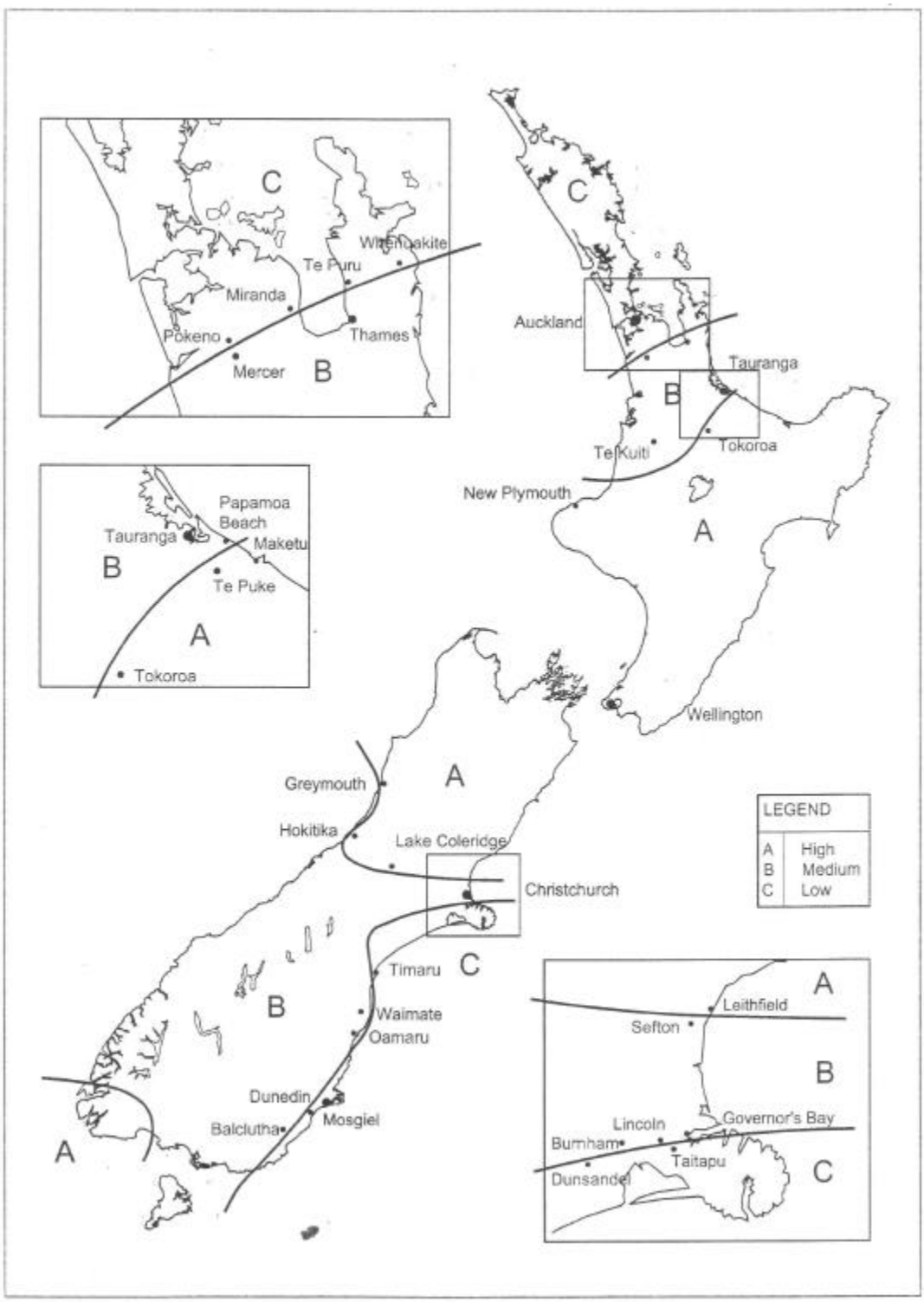

Fig. A3 – NZ Seismic Zones (from NZS3604)